# Hot-Tap Saddles

# ENGINEERING GUIDE

**Contact Spears® for any Information not found.**



**Suitable for Oil-Free air handling to 25 psi, not for distribution of compressed air or gas**
**See Spears® Product Sourcebook for product Offerings**

# Allows Connection to Existing Pipelines Under Pressure

Specially designed tapping saddle allows pipe branch connection to pressurized "Hot" lines without system shut-down.

- Industrial Grade Bolt-on Saddle with EPDM or FKM O-ring Seals and Choice of Zinc Plated Steel or Type 316 Stainless Steel Hardware.
- Built-in Brass or Stainless Steel Cutter Easily Cuts Hole in PVC, CPVC, HDPE and PP Pipe. Special Design Captures and Retains Coupon from Hole.
- Pressure Rated up to 235 psi @ 73°F.
- Available to fit IPS Pipe 2" through 8" with Versatile 3/4" Socket - 1" Spigot Combination Branch Outlet or 1-1/2" Socket - 2" Spigot Combination Branch Outlet

## TECHNICAL DATA

| Maximum Service Temperatures | | Pressure Rating @ 73°F | |
|---|---|---|---|
| PVC | 140°F | 2" - 4" | 235 psi |
| CPVC | 200°F | 6" | 200 psi |
| | | 8" | 150 psi |

**Note:** Elevated service temperatures require system pressure de-rating.

**Note:** Some leakage is possible during the tapping process, therefore "hot-taps" are not recommended for corrosive or dangerous fluid medium.

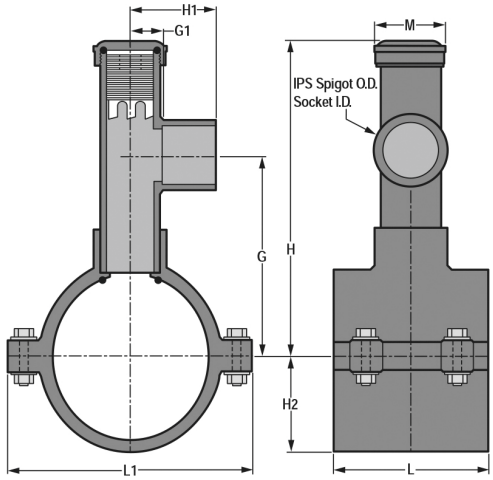


## Dimensions - EPDM Saddle x Socket (Spigot) Zinc Plated Bolds

| Part Number | Size | G | G1 | H | H 1 | H2 | L | L1 | M |
|---|---|---|---|---|---|---|---|---|---|
| HT2-248C | 2 x 3/4 (1) | 3-9/16 | 1 | 6-3/16 | 2 | 1-1/2 | 2-7/16 | 3-1/2 | 2 |
| HT2-251C | 2 x 1-1/2 (2) | 4-9/16 | 1-1/4 | 8-15/16 | 2-11/16 | 1-1/2 | 2-7/16 | 3-1/2 | 2-7/8 |
| HT2-288C | 2-1/2 x 3/4 (1) | 3-15/16 | 1 | 6-9/16 | 2 | 1-3/4 | 4-1/8 | 4-1/8 | 2 |
| HT2-291C | 2-1/2 x 1-1/2 (2) | 4-13/16 | 1-1/4 | 9-3/16 | 2-11/16 | 1-3/4 | 4-1/8 | 4-1/8 | 2-7/8 |
| HT2-334C | 3 x 3/4 (1) | 4-1/6 | 1 | 6-11/16 | 2 | 2 | 3 | 4-3/4 | 2 |
| HT2-337C | 3 x 1-1/2 (2) | 5-1/4 | 1-1/4 | 9-5/8 | 2-11/16 | 2 | 4-1/8 | 4-3/4 | 2-7/8 |
| HT2-416C | 4 x 3/4 (1) | 4-11/16 | 1 | 7-5/16 | 2 | 2-5/8 | 3 | 5-13/16 | 2 |
| HT2-419C | 4 x 1-1/2 (2) | 5-13/16 | 1-1/4 | 10-3/16 | 2-11/16 | 2-5/8 | 4-1/8 | 5-13/16 | 2-7/8 |
| HT2-524C | 6 x 3/4 (1) | 6 | 1 | 8-5/8 | 2 | 3-7/8 | 3 | 8-1/8 | 2 |
| HT2-527C | 6 x 1-1/2 (2) | 7-1/8 | 1-1/4 | 11-1/2 | 2-11/16 | 3-7/8 | 4-1/8 | 8-1/8 | 2-7/8 |
| HT2-574C | 8 x 3/4 (1) | 7-1/4 | 1 | 9-7/8 | 2 | 4-7/8 | 8-1/2 | 10-1/8 | 2 |
| HT2-577C | 8 x 1-1/2 (2) | 8-9/16 | 1-1/4 | 12-9/16 | 2-11/16 | 4-7/8 | 8-1/2 | 10-1/8 | 2-7/8 |

EPDM Saddle x Socket (Spigot) SS316 Bolts, Add The Letter "**S**" Before The Dash. e.g. Part Number HT2**S**-248C = 2x3/4 CPVC Bolt On Saddle, EPDM O-ring, Stainless Steel Hardware. FKM Saddle x Socket (Spigot) Zinc Plated Bolts, Add The Number "**3**" Before The Dash. e.g. Part Number HT**3**-248C = 2x3/4 CPVC Bolt On Saddle, FKM O-ring, Zink Plated Hardware. FKM Saddle x Socket (Spigot) SS316 Bolts, Add "**3S**" Before The Dash. e.g. Part Number HT**3S**-248C = 2x3/4 CPVC Bolt On Saddle, FKM O-ring, Stainless Steel Hardware. EPDM with Stainless Steel Cutter & Bolts, Add "**S2S**" Before The Dash. e.g. Part Number HT**S2S**-248C = 2x3/4 CPVC Bolt On Saddle, EPDM O-ring, Stainless Steel Cutter & Hardware. FKM with Stainless Steel Cutter & Bolts, Add "**S3S**" Before The Dash. e.g. Part Number HT**S3S**-248C = 2x3/4 CPVC Bolt On Saddle, FKM O-ring, Stainless Steel Cutter & Hardware.

# Allows Connection to Existing Pipelines Under Pressure

Specially designed tapping saddle allows pipe branch connection to pressurized "Hot" lines without system shut-down.

- Industrial Grade Bolt-on Saddle with EPDM or FKM O-ring Seals and Choice of Zinc Plated Steel or Type 316 Stainless Steel Hardware.
- Built-in Brass or Stainless Steel Cutter Easily Cuts Hole in PVC, CPVC, HDPE and PP Pipe. Special Design Captures and Retains Coupon from Hole.
- Pressure Rated up to 235 psi @ 73°F.
- Available to fit IPS Pipe 2" through 8" with Versatile 3/4" Socket - 1" Spigot Combination Branch Outlet or 1-1/2" Socket - 2" Spigot Combination Branch Outlet

## TECHNICAL DATA

| Maximum Service Temperatures | | Pressure Rating @ 73°F | |
|---|---|---|---|
| PVC | 140°F | 2" - 4" | 235 psi |
| CPVC | 200°F | 6" | 200 psi |
| | | 8" | 150 psi |

**Note:** Elevated service temperatures require system pressure de-rating.

**Note:** Some leakage is possible during the tapping process, therefore "hot-taps" are not recommended for corrosive or dangerous fluid medium.

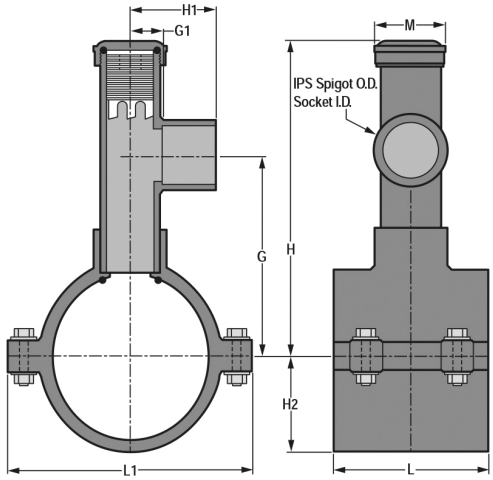


## Dimensions - EPDM Saddle x Socket (Spigot) Zinc Plated Bolds

| Part Number | Size | G | G1 | H | H 1 | H2 | L | L1 | M |
|---|---|---|---|---|---|---|---|---|---|
| HT2-248C | 2 x 3/4 (1) | 3-9/16 | 1 | 6-3/16 | 2 | 1-1/2 | 2-7/16 | 3-1/2 | 2 |
| HT2-251C | 2 x 1-1/2 (2) | 4-9/16 | 1-1/4 | 8-15/16 | 2-11/16 | 1-1/2 | 2-7/16 | 3-1/2 | 2-7/8 |
| HT2-288C | 2-1/2 x 3/4 (1) | 3-15/16 | 1 | 6-9/16 | 2 | 1-3/4 | 4-1/8 | 4-1/8 | 2 |
| HT2-291C | 2-1/2 x 1-1/2 (2) | 4-13/16 | 1-1/4 | 9-3/16 | 2-11/16 | 1-3/4 | 4-1/8 | 4-1/8 | 2-7/8 |
| HT2-334C | 3 x 3/4 (1) | 4-1/6 | 1 | 6-11/16 | 2 | 2 | 3 | 4-3/4 | 2 |
| HT2-337C | 3 x 1-1/2 (2) | 5-1/4 | 1-1/4 | 9-5/8 | 2-11/16 | 2 | 4-1/8 | 4-3/4 | 2-7/8 |
| HT2-416C | 4 x 3/4 (1) | 4-11/16 | 1 | 7-5/16 | 2 | 2-5/8 | 3 | 5-13/16 | 2 |
| HT2-419C | 4 x 1-1/2 (2) | 5-13/16 | 1-1/4 | 10-3/16 | 2-11/16 | 2-5/8 | 4-1/8 | 5-13/16 | 2-7/8 |
| HT2-524C | 6 x 3/4 (1) | 6 | 1 | 8-5/8 | 2 | 3-7/8 | 3 | 8-1/8 | 2 |
| HT2-527C | 6 x 1-1/2 (2) | 7-1/8 | 1-1/4 | 11-1/2 | 2-11/16 | 3-7/8 | 4-1/8 | 8-1/8 | 2-7/8 |
| HT2-574C | 8 x 3/4 (1) | 7-1/4 | 1 | 9-7/8 | 2 | 4-7/8 | 8-1/2 | 10-1/8 | 2 |
| HT2-577C | 8 x 1-1/2 (2) | 8-9/16 | 1-1/4 | 12-9/16 | 2-11/16 | 4-7/8 | 8-1/2 | 10-1/8 | 2-7/8 |

EPDM Saddle x Socket (Spigot) SS316 Bolts, Add The Letter "**S**" Before The Dash. e.g. Part Number HT2**S**-248C = 2x3/4 CPVC Bolt On Saddle, EPDM O-ring, Stainless Steel Hardware. FKM Saddle x Socket (Spigot) Zinc Plated Bolts, Add The Number "**3**" Before The Dash. e.g. Part Number HT**3**-248C = 2x3/4 CPVC Bolt On Saddle, FKM O-ring, Zink Plated Hardware. FKM Saddle x Socket (Spigot) SS316 Bolts, Add "**3S**" Before The Dash. e.g. Part Number HT**3S**-248C = 2x3/4 CPVC Bolt On Saddle, FKM O-ring, Stainless Steel Hardware. EPDM with Stainless Steel Cutter & Bolts, Add "**S2S**" Before The Dash. e.g. Part Number HT**S2S**-248C = 2x3/4 CPVC Bolt On Saddle, EPDM O-ring, Stainless Steel Cutter & Hardware. FKM with Stainless Steel Cutter & Bolts, Add "**S3S**" Before The Dash. e.g. Part Number HT**S3S**-248C = 2x3/4 CPVC Bolt On Saddle, FKM O-ring, Stainless Steel Cutter & Hardware.



**Suitable for Oil-Free air handling to 25 psi, not for distribution of compressed air or gas**
**See Spears® Product Sourcebook for product Offerings**

## Basic Installation

Hot-Tap Saddles are designed for adding branch connections to piping systems under live ("hot") pressure. Hot-Tap Saddle branch outlets are either 3/4" socket (with 1" Spigot O.D.) or 1-1/2" socket (with 2" Spigot O.D.) in saddle sizes 2" through 8" to fit IPS pipe using a built-in O-ring seal. Internal cutter is operated using conventional ratchet and drive extension and permanently retains coupon cut from pipe. Maximum operating pressure at 73°F is 235 psi for saddle sizes 2" - 4", 200 psi for 6" saddles & 150 psi for 8".

## SEE PRODUCT INSTALLATION INSTRUCTION FOR DETAILS

**COMPONENTS**

**The Hot-Tap Saddle includes the following components :**

1. Cap
2. Upper O-ring
3. Hot-Tap Cutter
4. Bolt/Washer
5. Saddle Body
6. Lower O-ring
7. Saddle Bottom
8. Nut/Washer

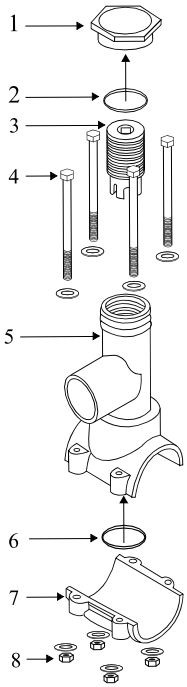


### STEP 1 Assemble on Pipe

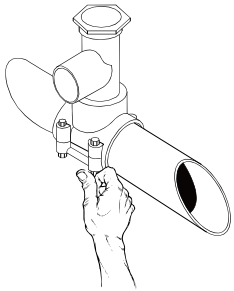

### STEP 2 Torque to Specifications

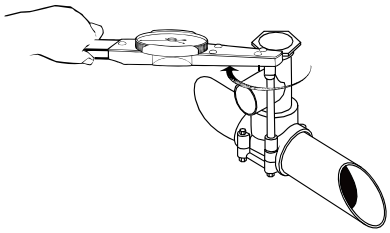

### STEP 3 Cement Branch Take-off

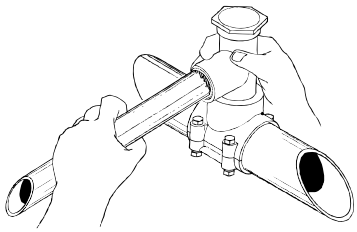

Allow joint to cure.

### STEP 4 Remove Cap

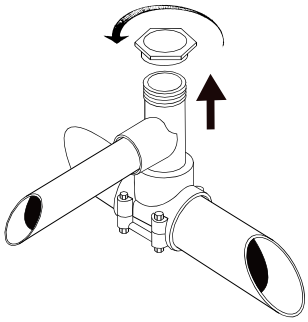

### STEP 5 Tap to Required Depth

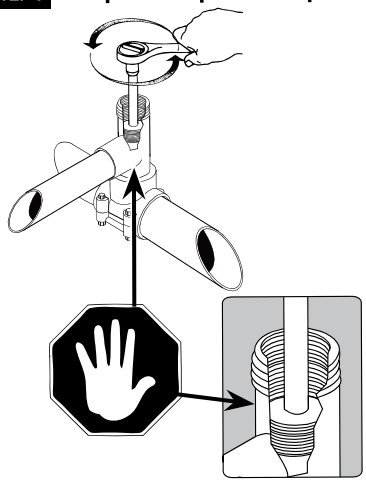

### STEP 6 Back-off Cutter to Top to Open Flow

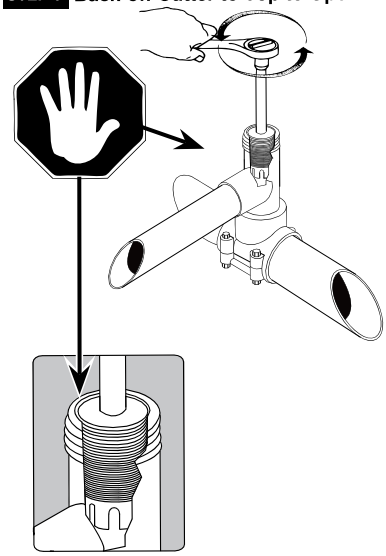
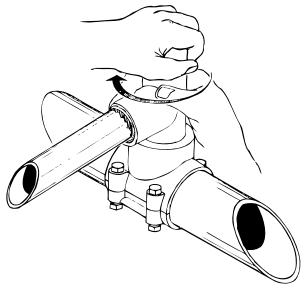
### STEP 7 Reinstall Opening Sealed Cap